VANDERBILT UNIVERSITY

MEDICAL & ELECTROMECHANICAL DESIGN LAB

Toward Safe Endonasal Surgery Using Teleoperated Continuum Robots

Dr. Jessica Burgner

IROS 2011, Workshop on Methods for Safer Surgical Robotics Procedures

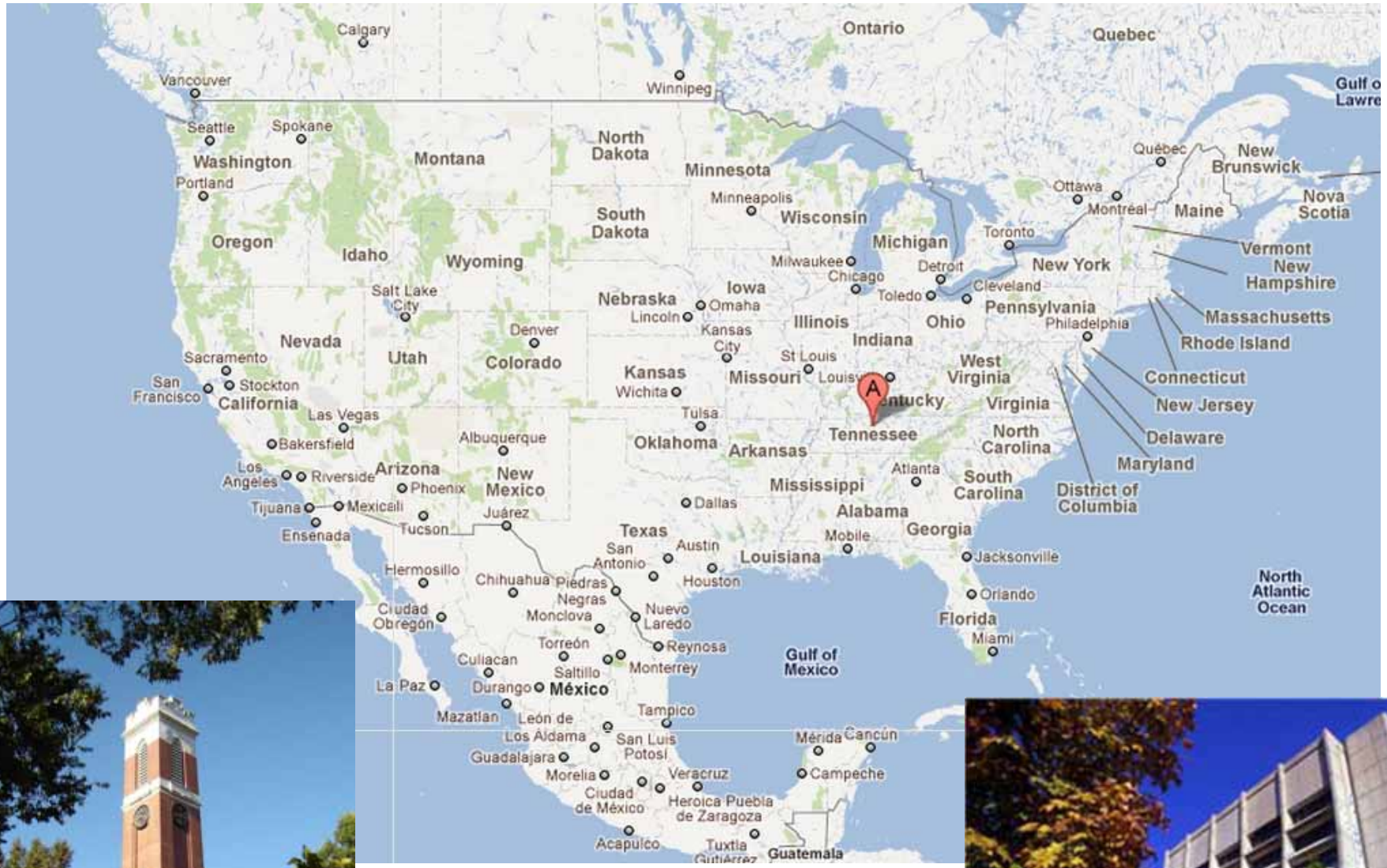

VANDERBILT UNIVERSITY

Mechanical Engineering

Bob Webster, PhD, PI

Jessica Burgner, PhD

Caleb Rucker, PhD

Phil Swaney

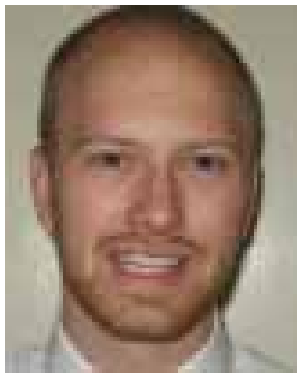

Hunter Gilbert

Otolaryngology & Neurological surgery

Paul Russel, MD

Kyle Weaver, MD

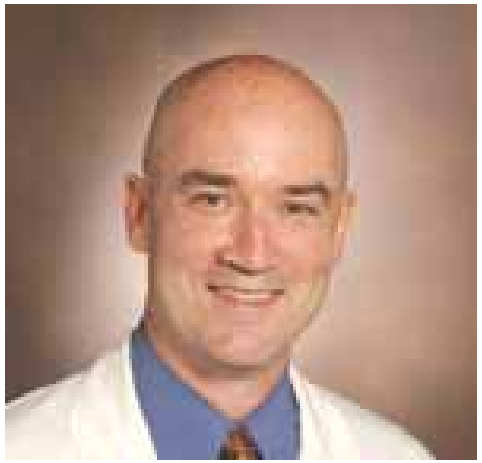

Skull Base Surgery

- 1 of 5* people develop a pituitary tumor
- 39% of all brain tumors are at tuberculum sellae

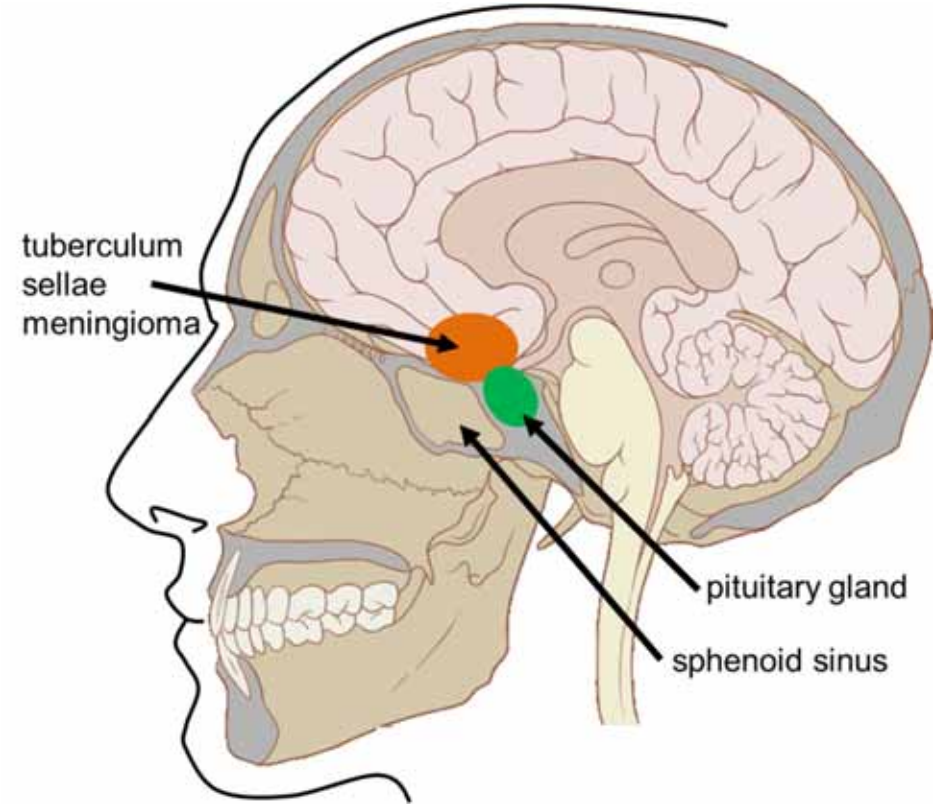

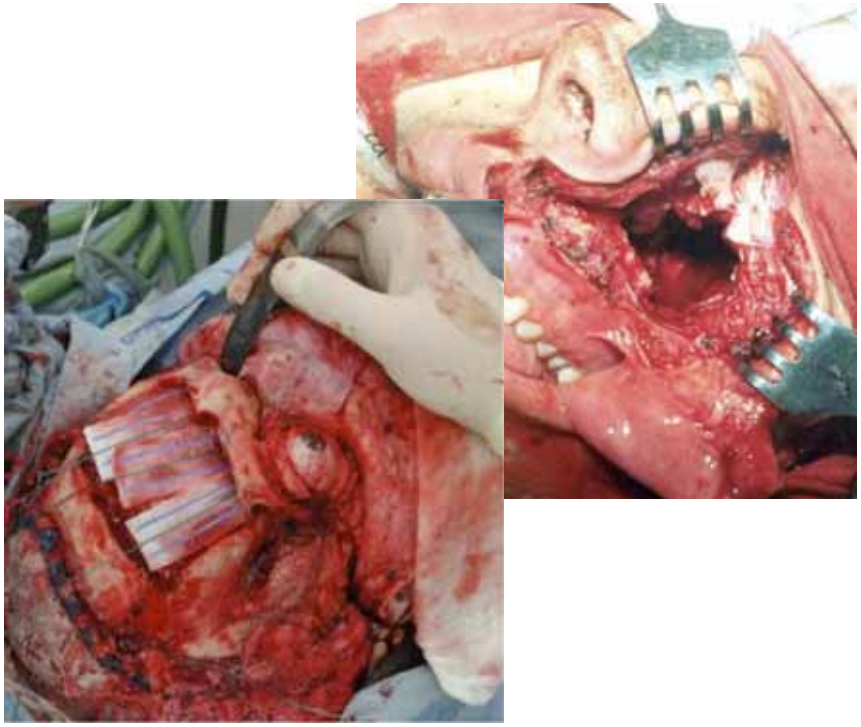

* *American Brain Tumor Association*

The Endonasal Approach

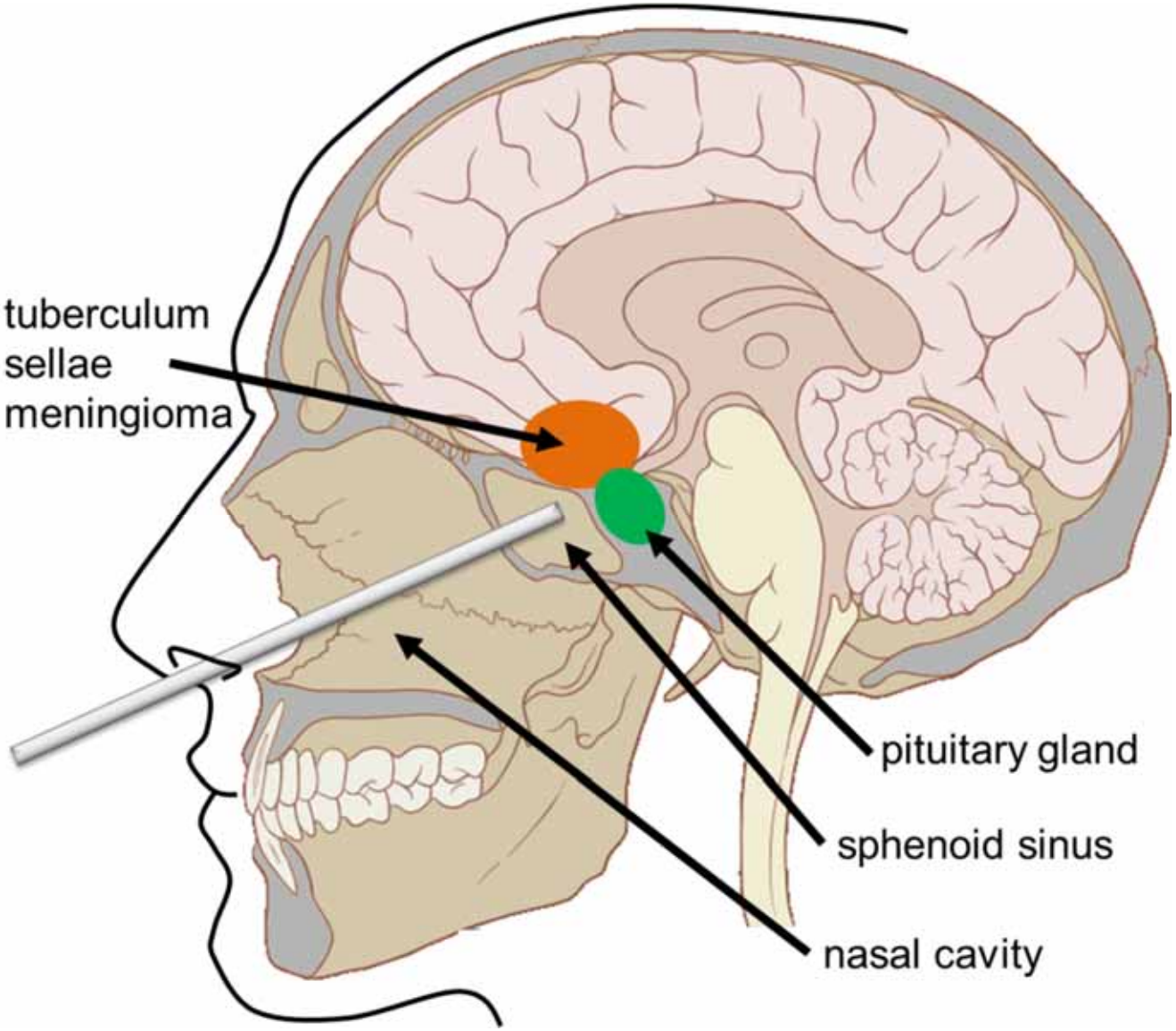

Endonasal Surgery - Video

Challenges

- Only 14.5% of skull base surgeries are performed endonasally
  - Limited dexterity of current instrumentation
  - Small number of expert surgeons
  - Visualization
- Attempts to use the daVinci

Hanna et al.

Concentric Tube Robots

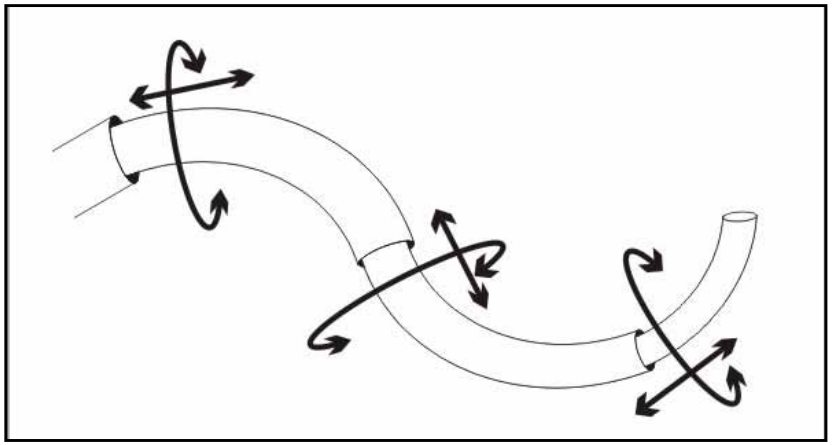

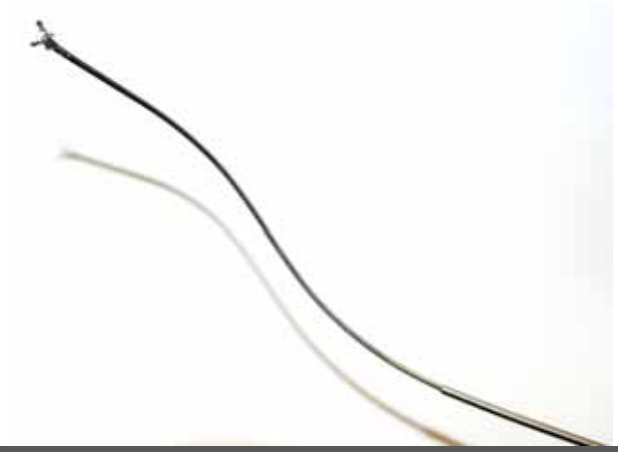

How We Address Safety

- Compliant, dexterous robot
- Modular actuation unit for custom designed active cannula robot
- Teleoperation
- Force sensing
- Image-guidance
- Virtual Fixtures

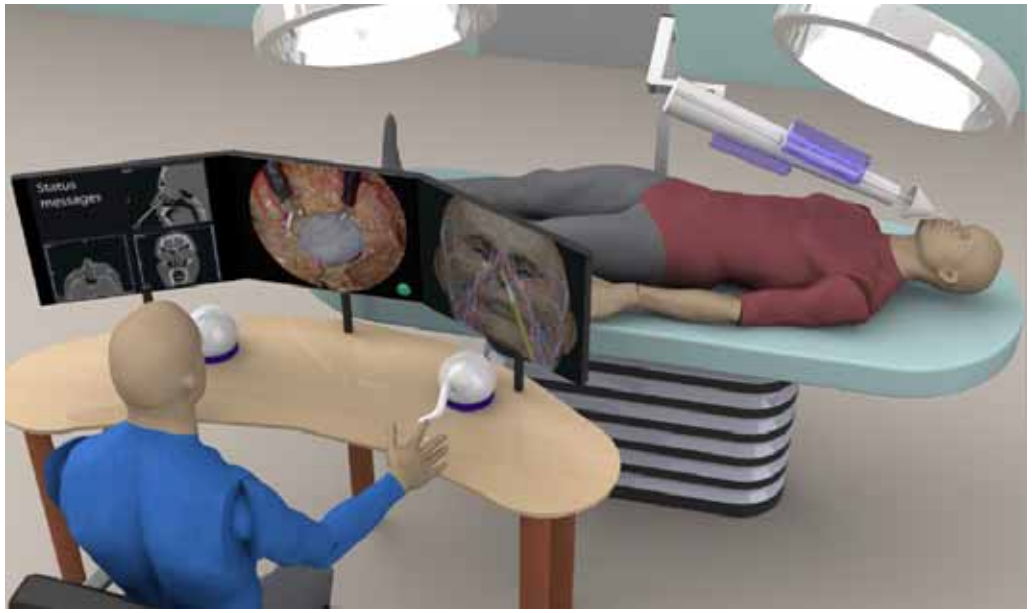

Robot Design - Workspace

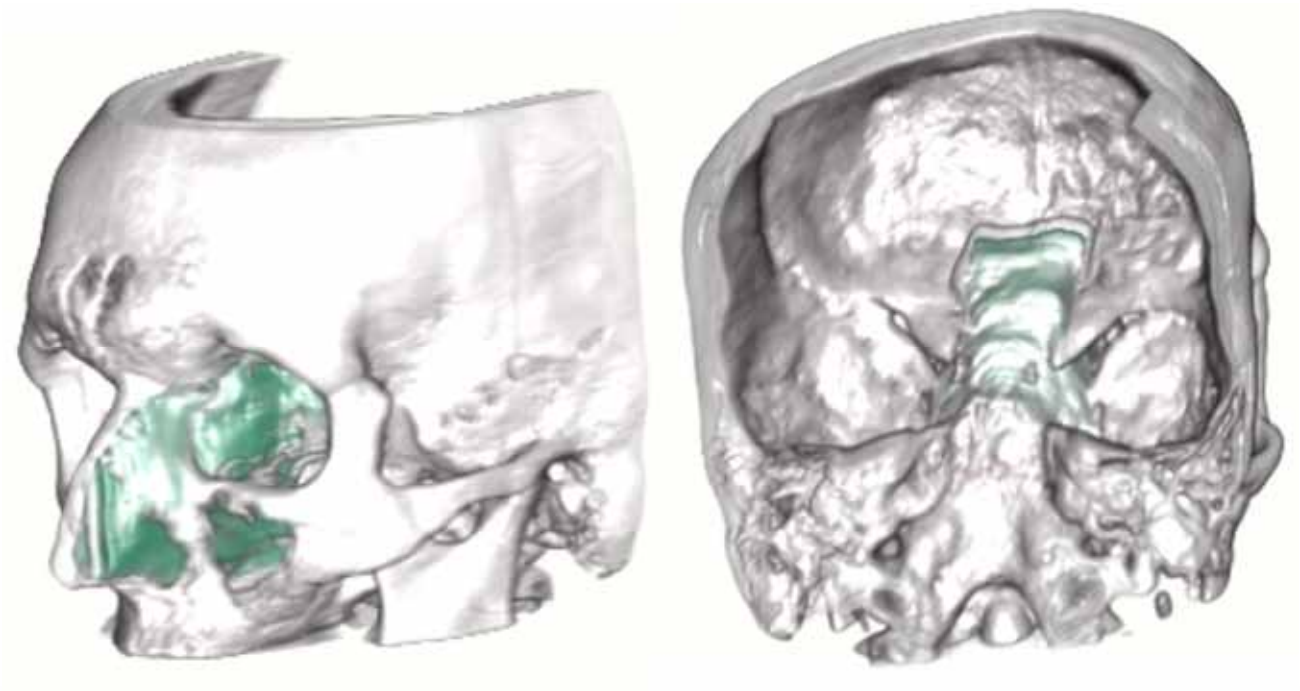

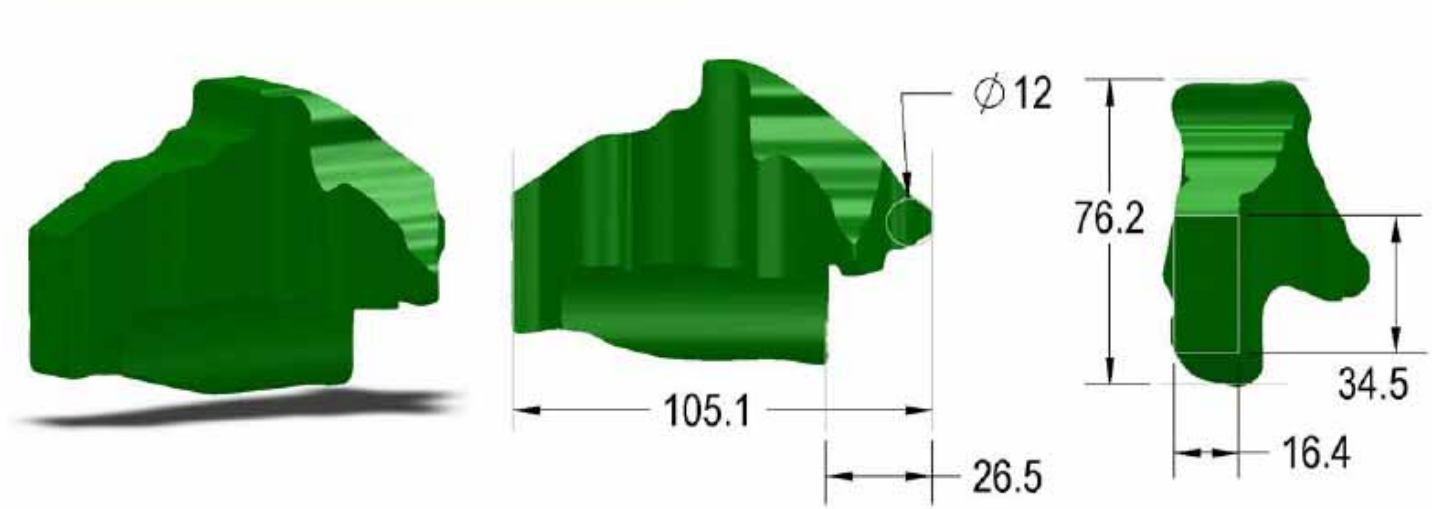

Design Parameters

- Number of tubes
- Tube lengths
- Tube curves
- Overall robot stiffness
  - Tube diamaters
  - Tube wall thicknesses
  - Tube configuration

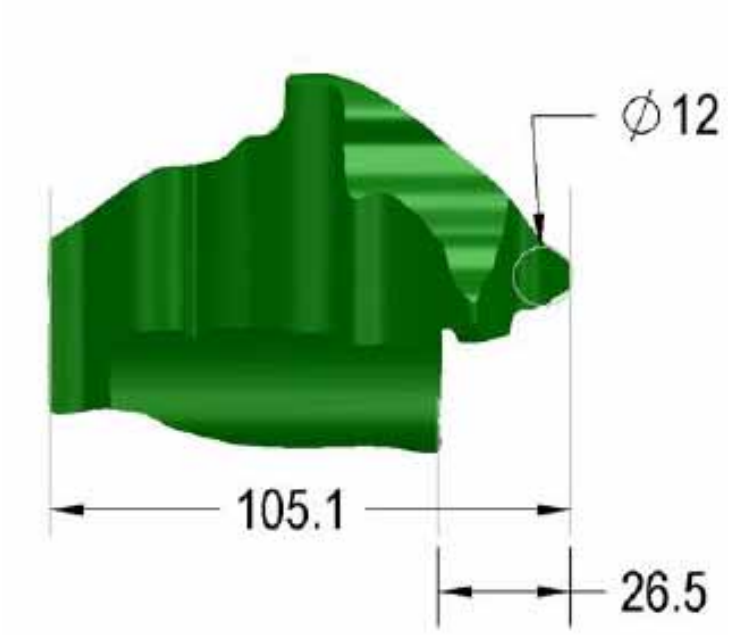

Optimize Tube Parameters

- 3 tube design
  - Outer tube straight
    - Fixed length (100mm)
  - Middle and inner tube
    - Initial straight length
    - Curved part with constant curvature
- Optimize for maximum workspace coverage at region of interest

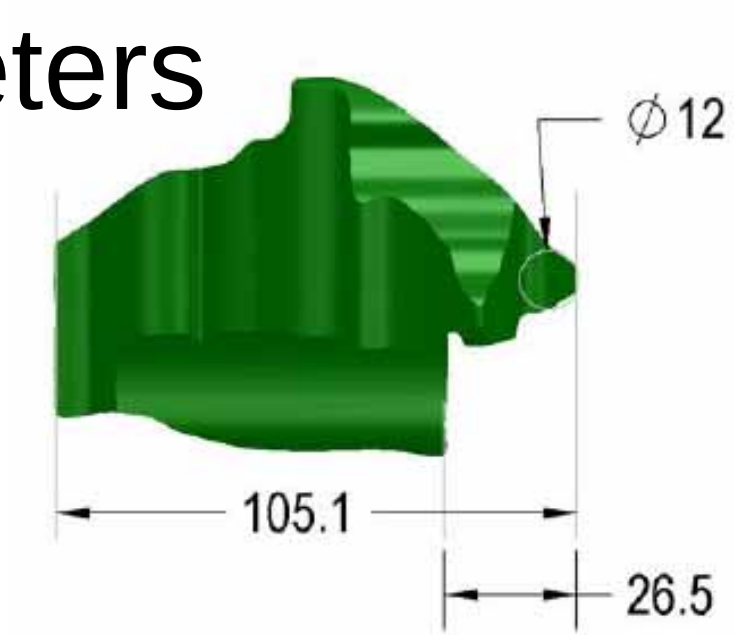

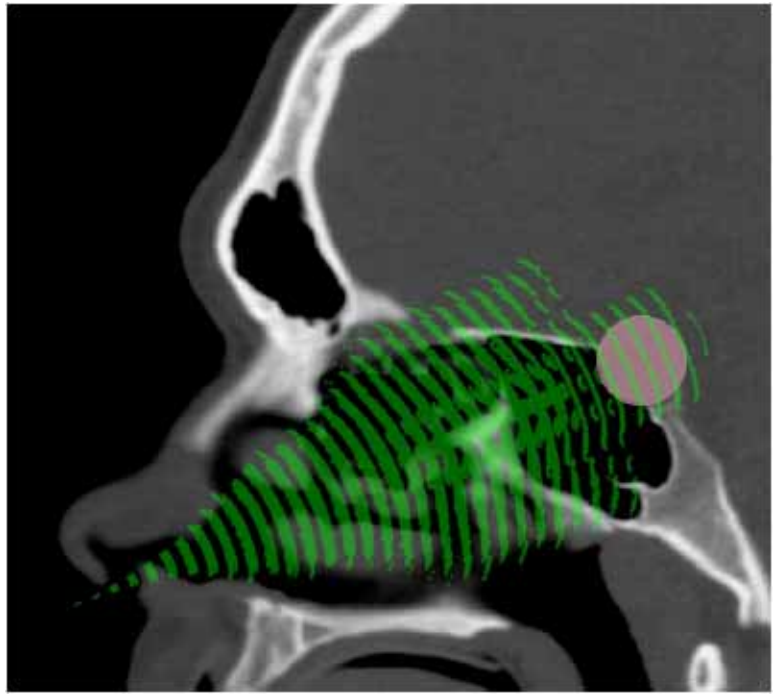

Teleoperated System

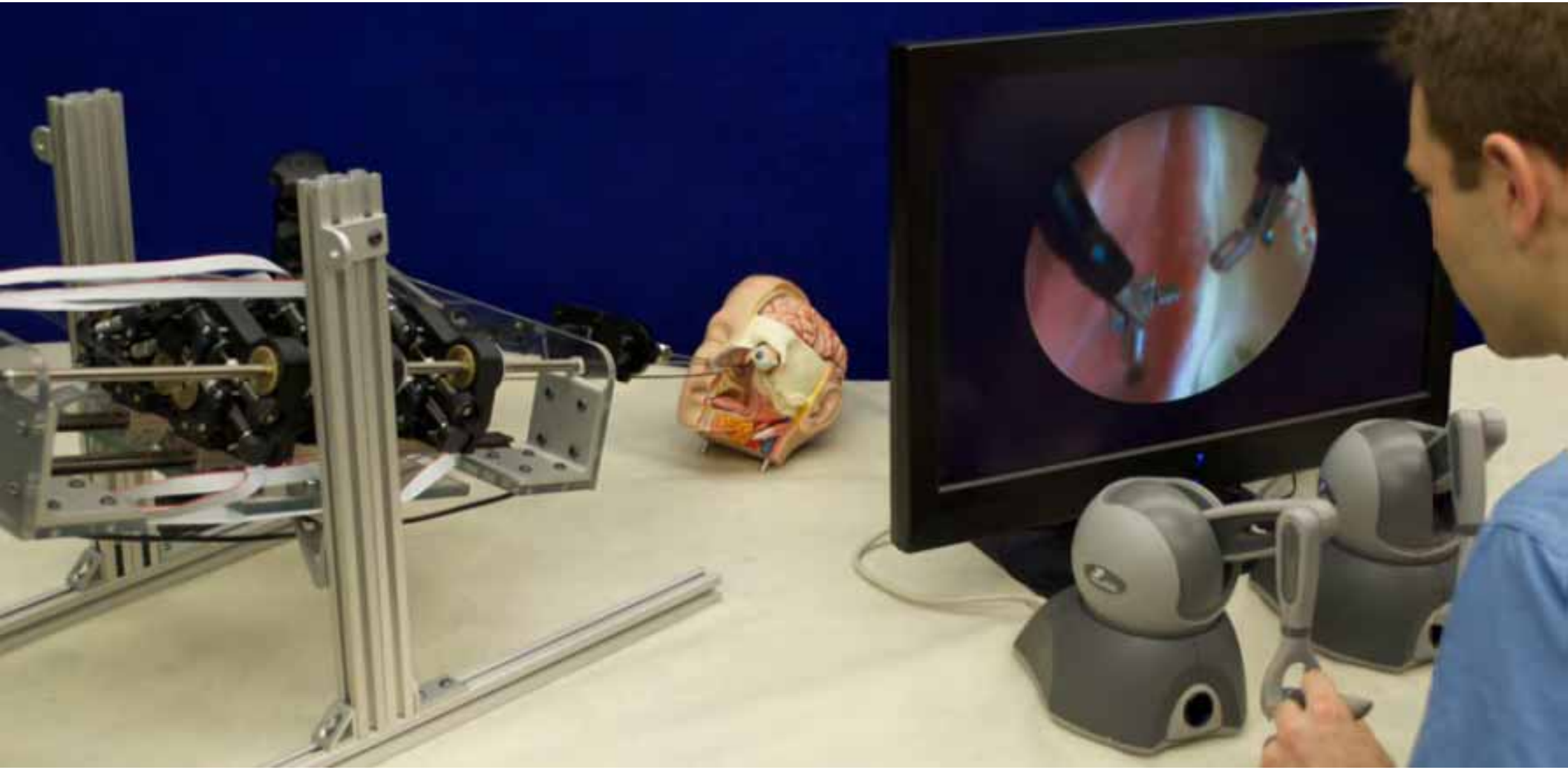

The Robot

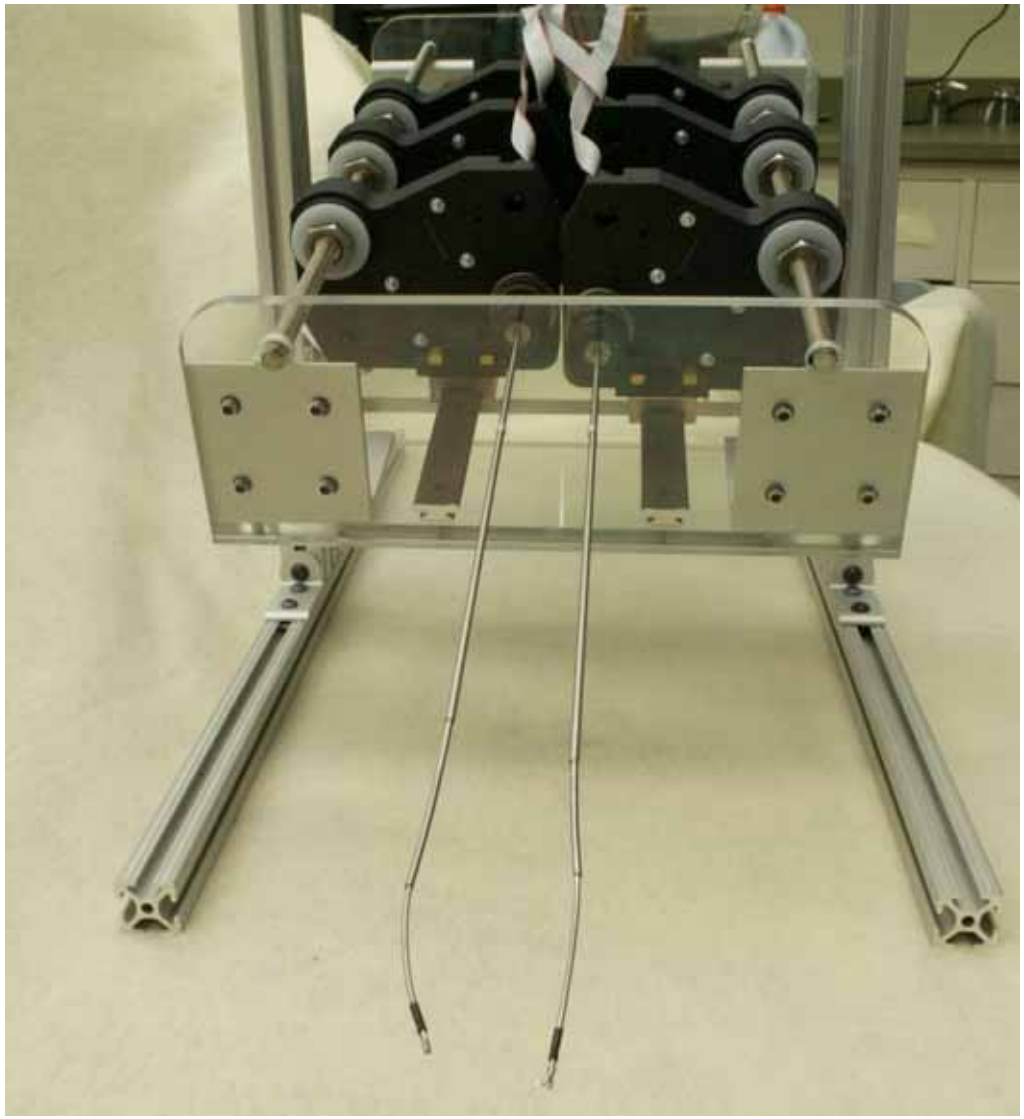

Cadaver Setup Trial

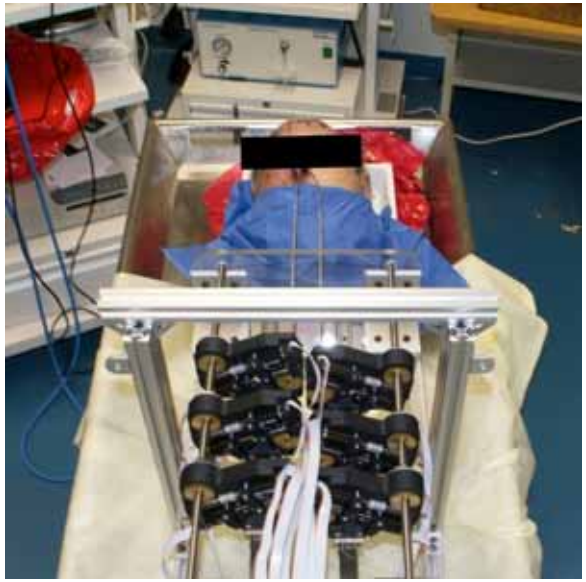

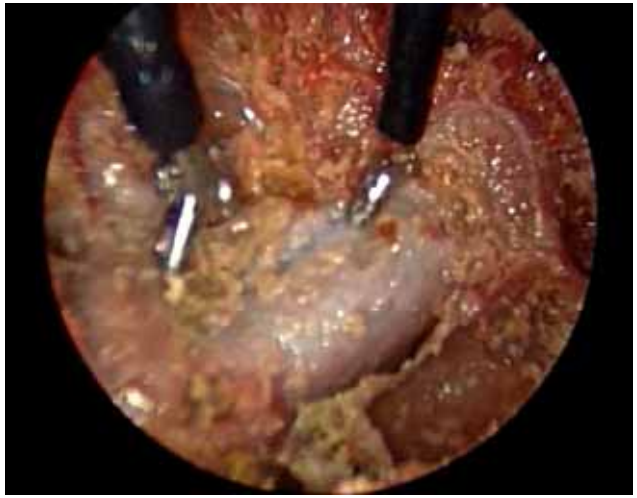

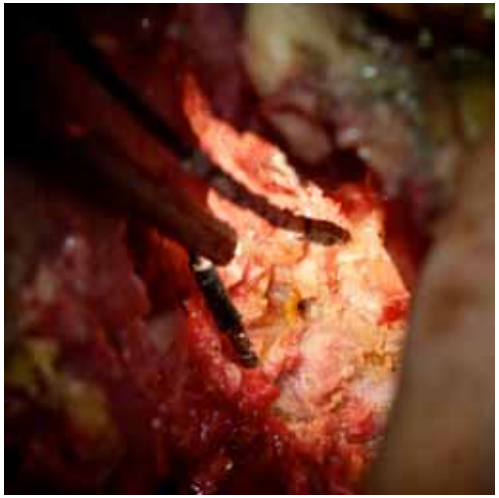

How We Address Safety

- Compliant, dexterous robot
- Modular actuation unit for custom designed active cannula robot
- **Teleoperation**
- Force sensing
- Image-guidance
- Virtual Fixtures

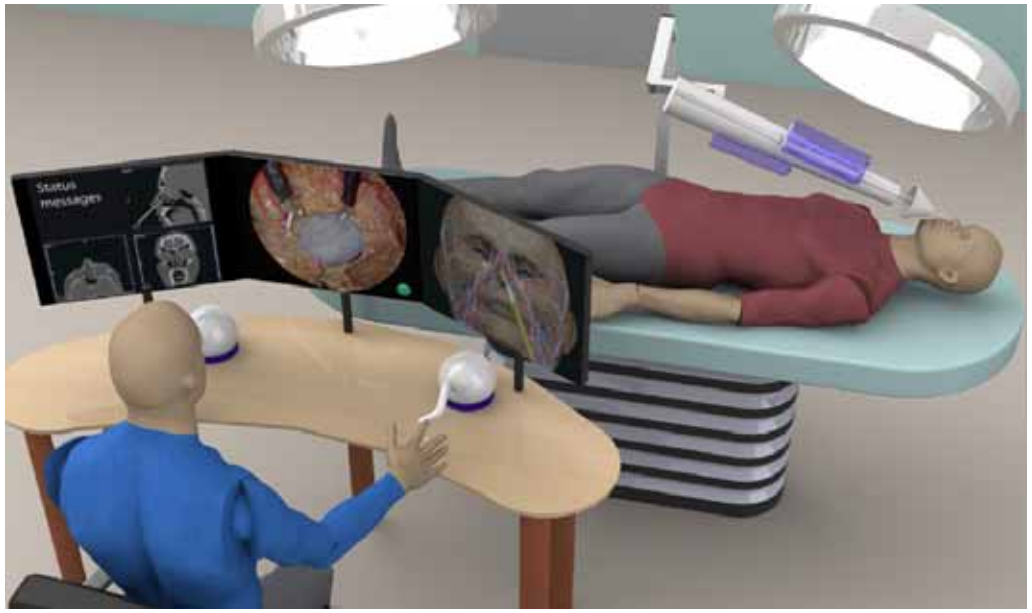

Mechanics-Based Model

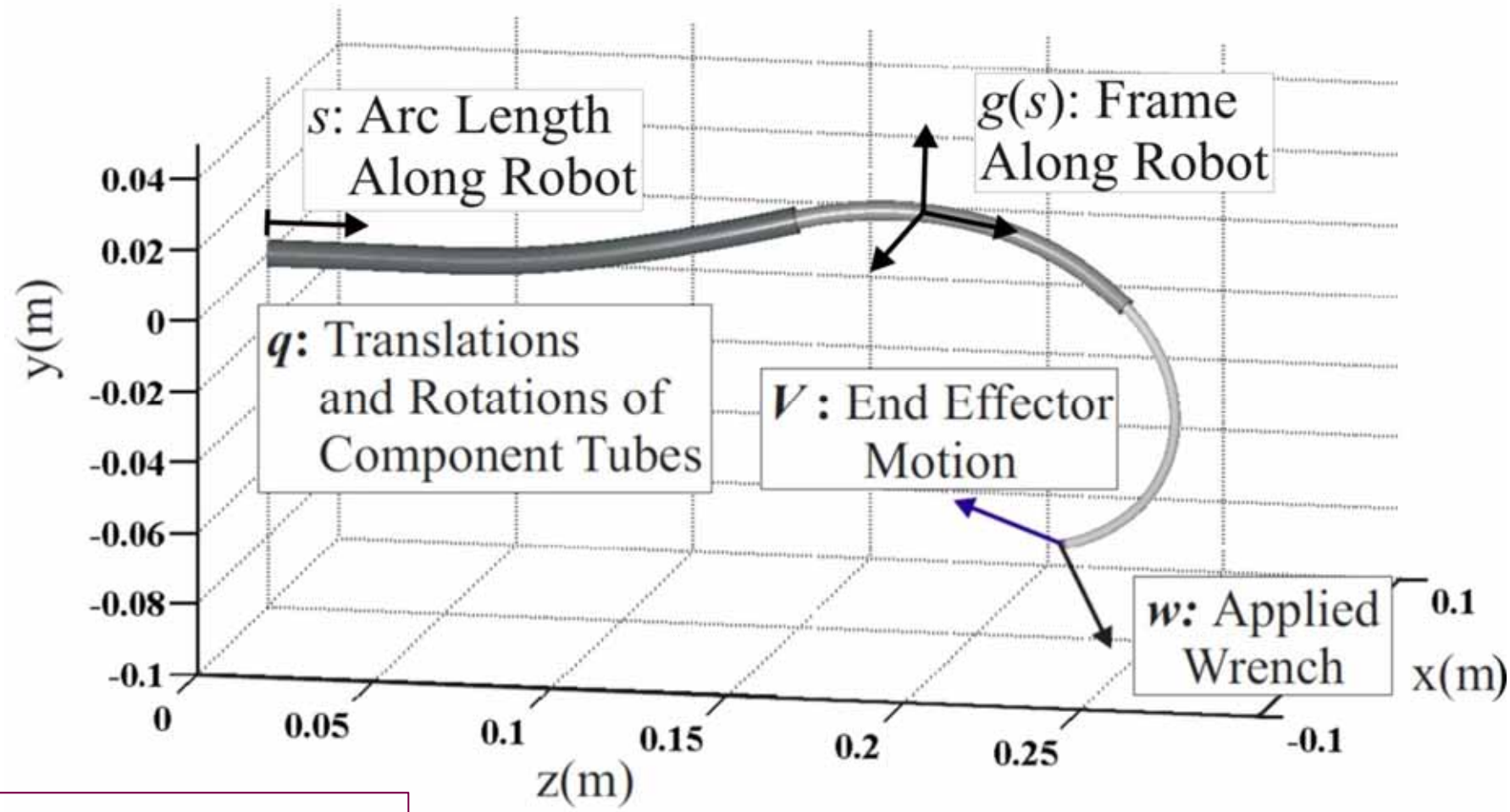

INPUTS:
Actuators ***q***
Loads ***w***

→

Model:
Nonlinear BVP

→

OUTPUTS:
Robot Shape ***g***(s)

Jacobian and Compliance Matrix

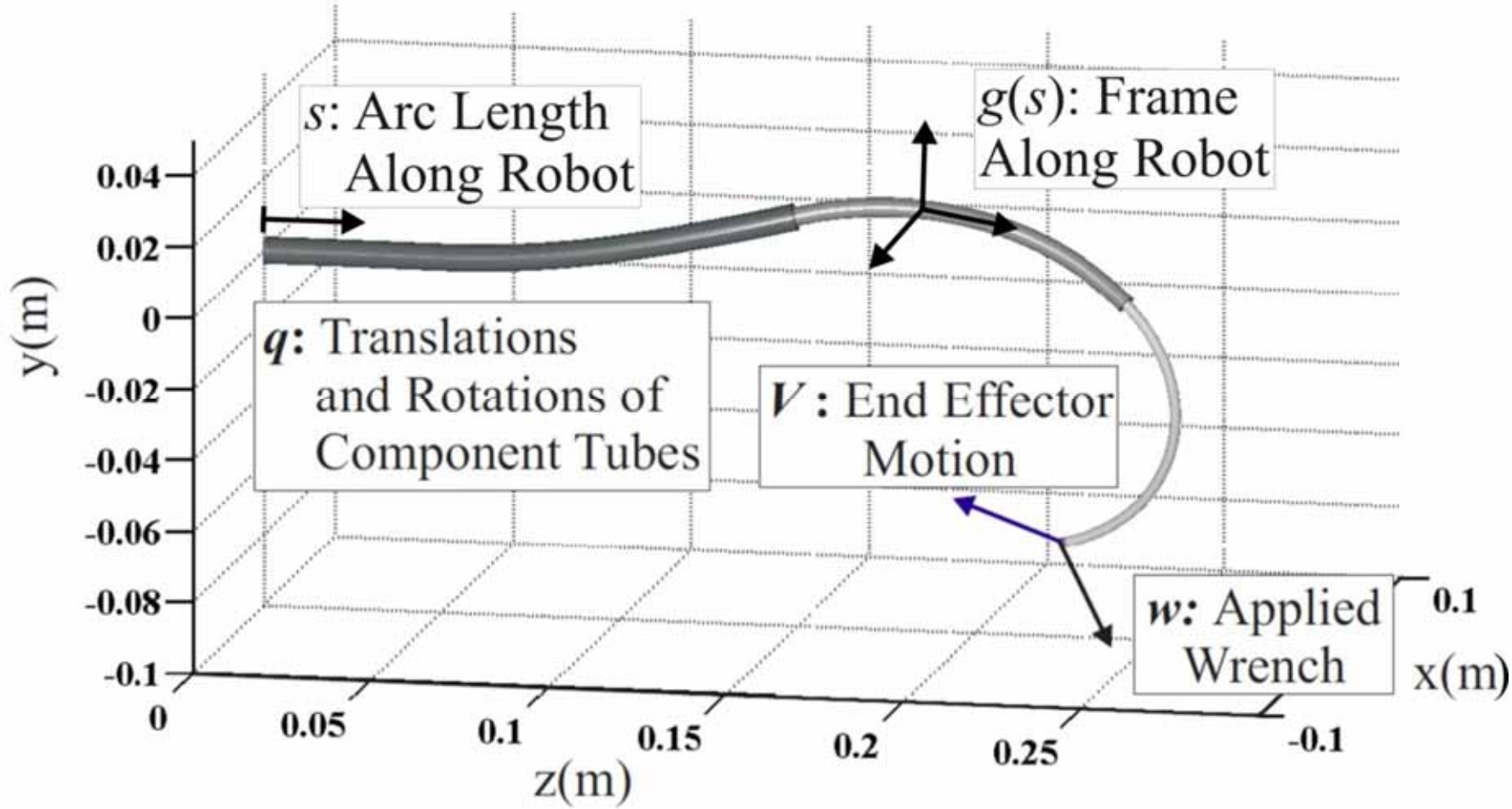

$$\boldsymbol{V} = J(s, \boldsymbol{q}, \boldsymbol{w})\dot{\boldsymbol{q}} + C(s, \boldsymbol{q}, \boldsymbol{w})\dot{\boldsymbol{w}}$$

D.C. Rucker, B.A. Jones, and R.J. Webster III. A Geometrically Exact Model for Externally Loaded Concentric Tube Continuum Robots. IEEE TRO, 26(5), 769-780, 2010.

Damped Least Squares Control

Objective Function

$$F = \frac{1}{2}\left(\underbrace{(J\dot{\boldsymbol{q}} - \boldsymbol{v}_0)^T W_0 (J\dot{\boldsymbol{q}} - \boldsymbol{v}_0)}_{\text{Weighted Tracking Accuracy}} + \sum_{i=1}^{m} \underbrace{(\dot{\boldsymbol{q}} - \boldsymbol{v}_i)^T W_i (\dot{\boldsymbol{q}} - \boldsymbol{v}_i)}_{\text{Damping \& Avoiding}}\right)$$

Minimize F

$$\dot{\boldsymbol{q}} = \left(JW_0J^T + \sum_{i=1}^{m} W_i\right)^{-1}\left(J^TW_0\boldsymbol{v}_0 + \sum_{i=1}^{n} W_i\boldsymbol{v}_i\right)$$

Teleoperation Control

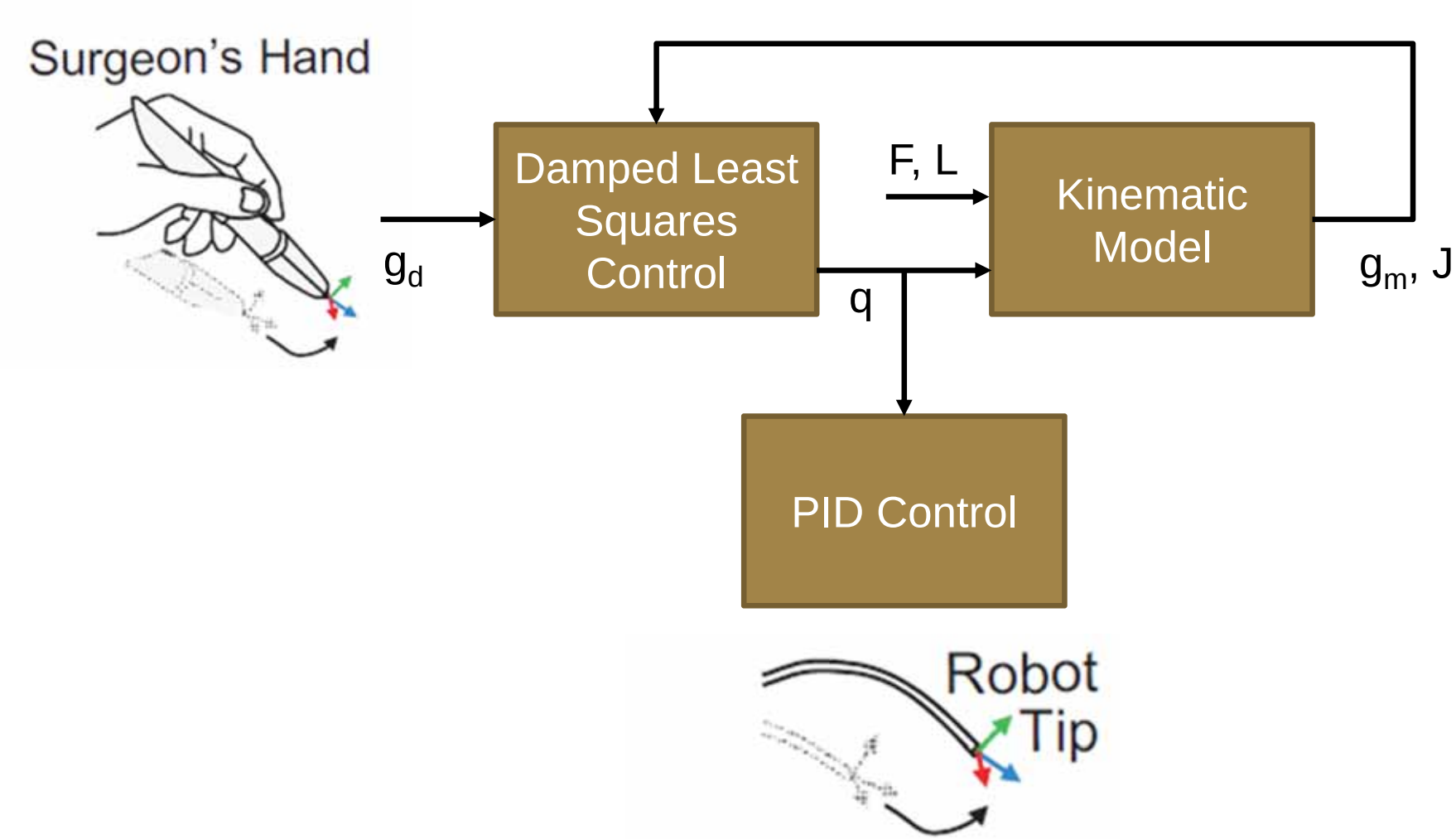

Teleoperation

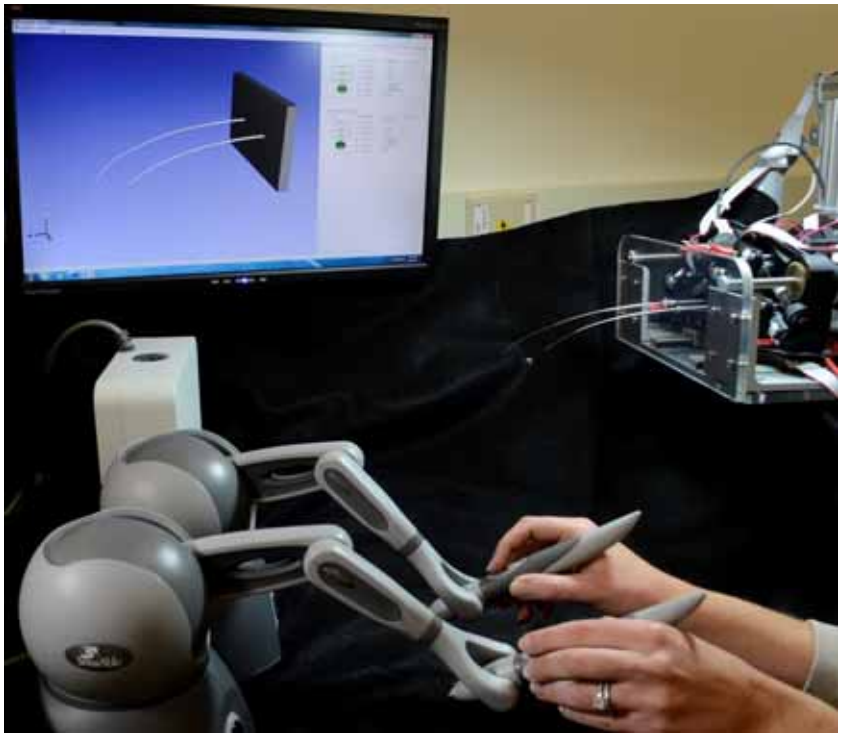

How We Address Safety

- Compliant, dexterous robot
- Modular actuation unit for custom designed active cannula robot
- Teleoperation
- **Force sensing**
- Image-guidance
- Virtual Fixtures

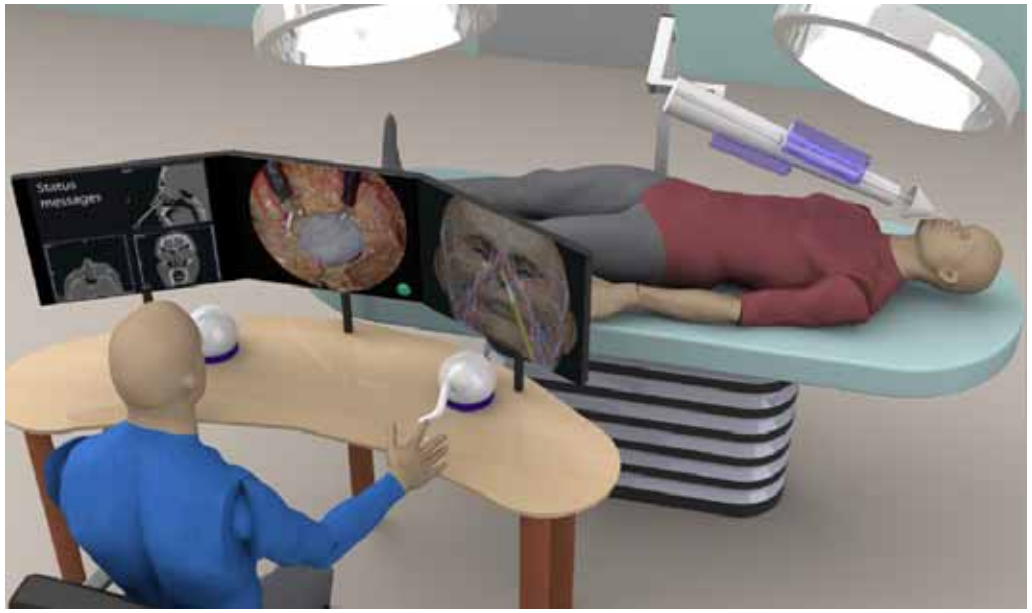

Intrinsic Force Sensing

- Deflection based wrench estimation

$$\boldsymbol{w}_e^{k+1} \approx \boldsymbol{w}_e^k + C^{-1}\left(g_p^{-1} g_s - I\right)^{\vee}$$

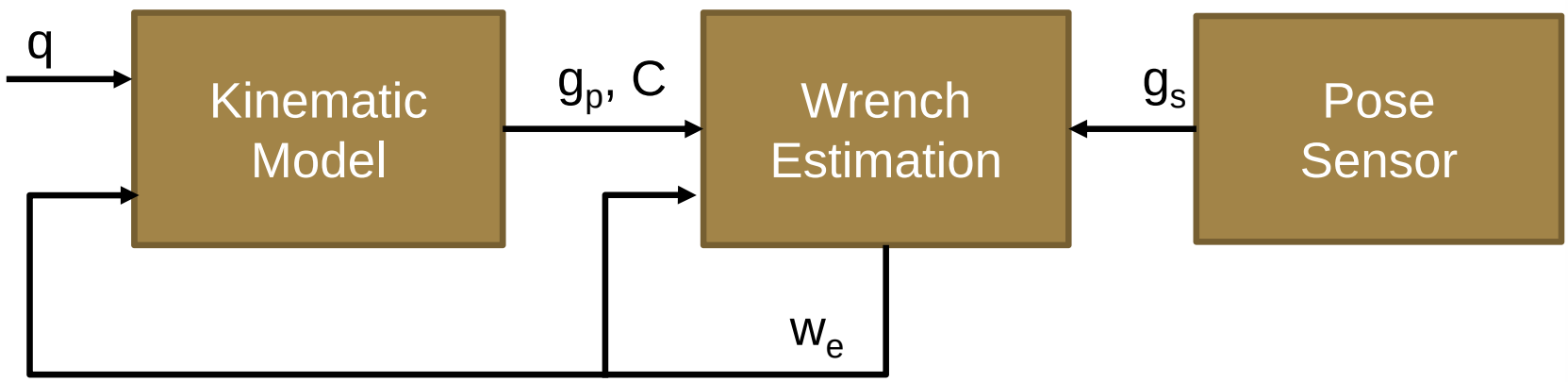

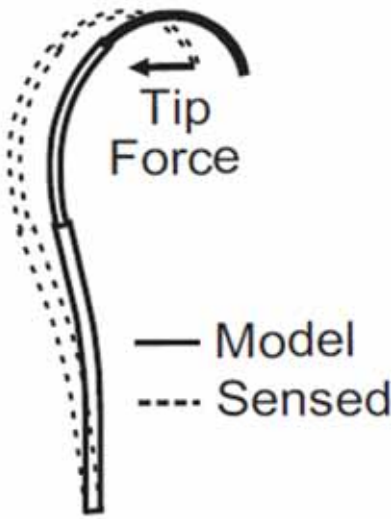

Extended Kalman Filter Approach

- g_s is subject to measurement inaccuracy

$$\boldsymbol{w}_e^{k+1} = \boldsymbol{w}_e^k + K\left(g_p^{-1} g_s - I\right)^\vee$$
$$\Sigma^{k+1} = (I - KC)\Sigma_p^k$$
$$K = \Sigma_p C^T \left(C \Sigma_p C^T + \Sigma_s\right)^{-1}$$

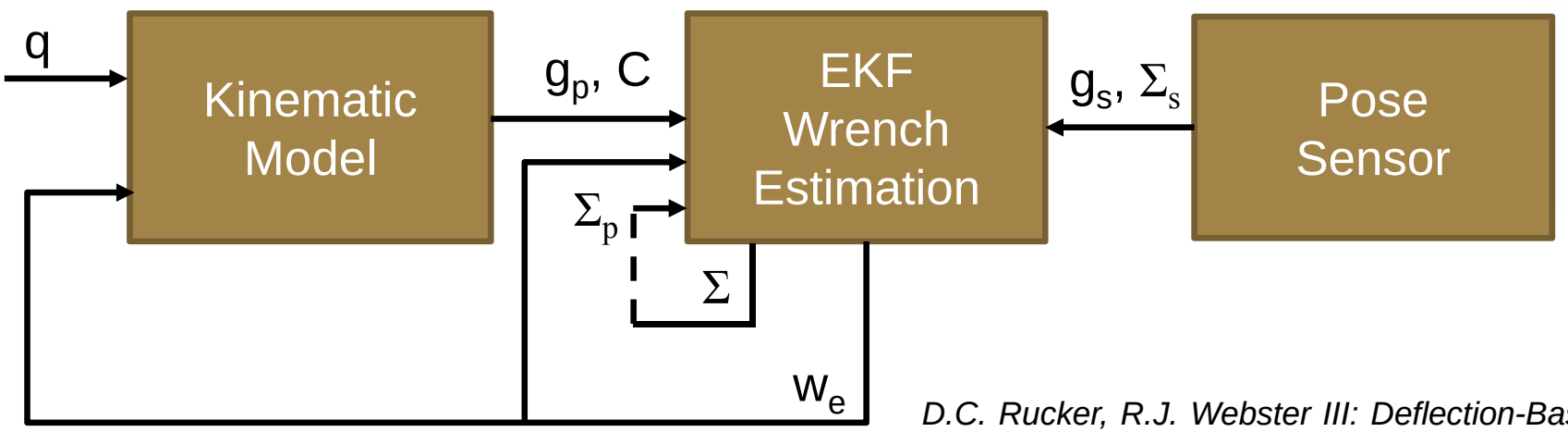

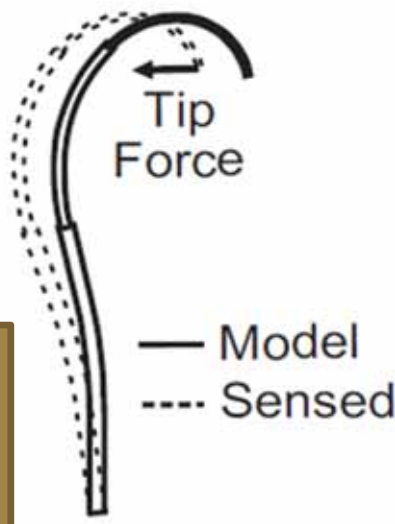

D.C. Rucker, R.J. Webster III: Deflection-Based Force Sensing for Continuum Robots: A Propabilistic Approach. IEEE IROS 2011.

Deflection based Force Sensing

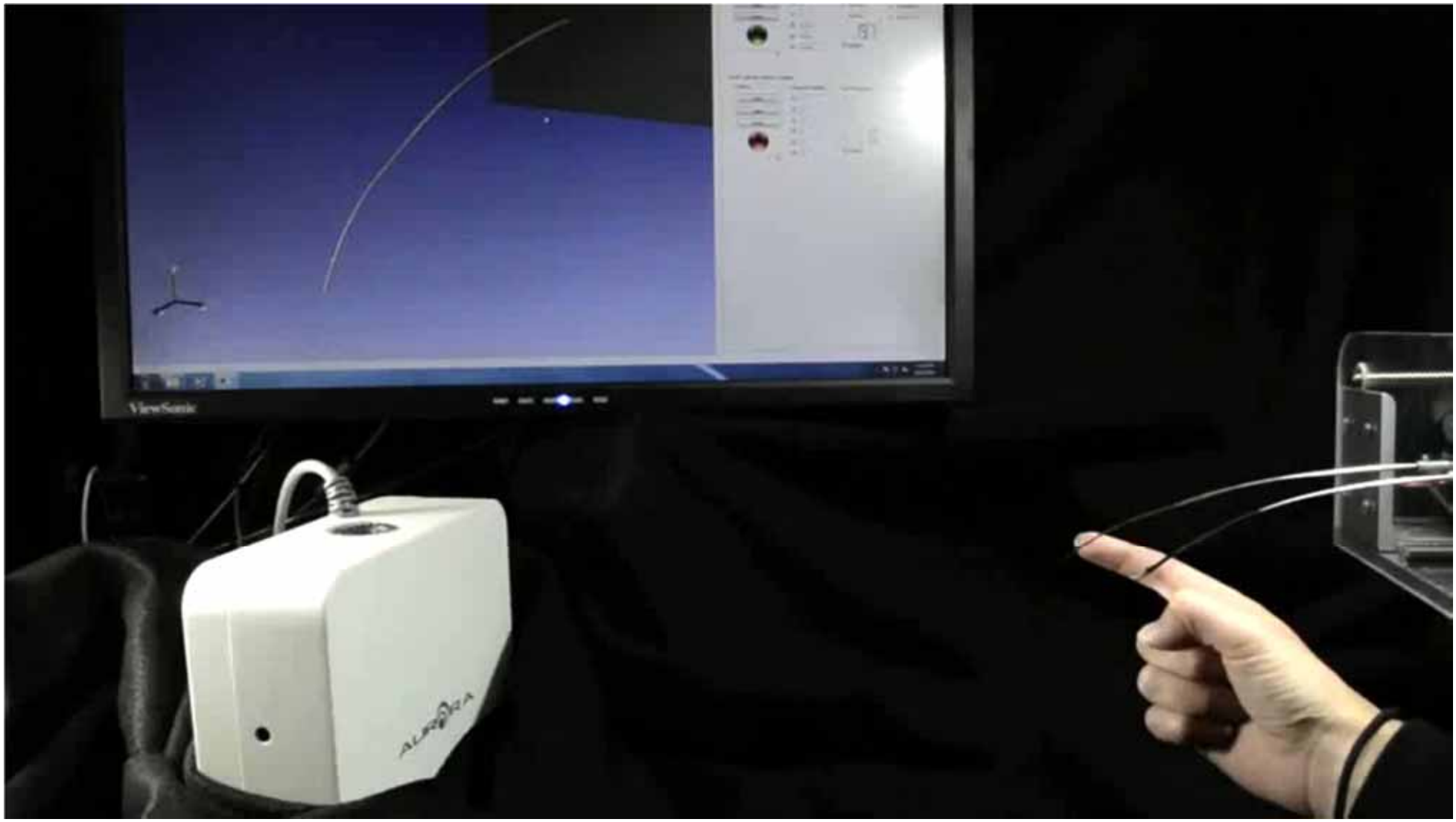

Increase Safety

- Approached from the medical application
  - Current limitations
  - Lack of instrumentation

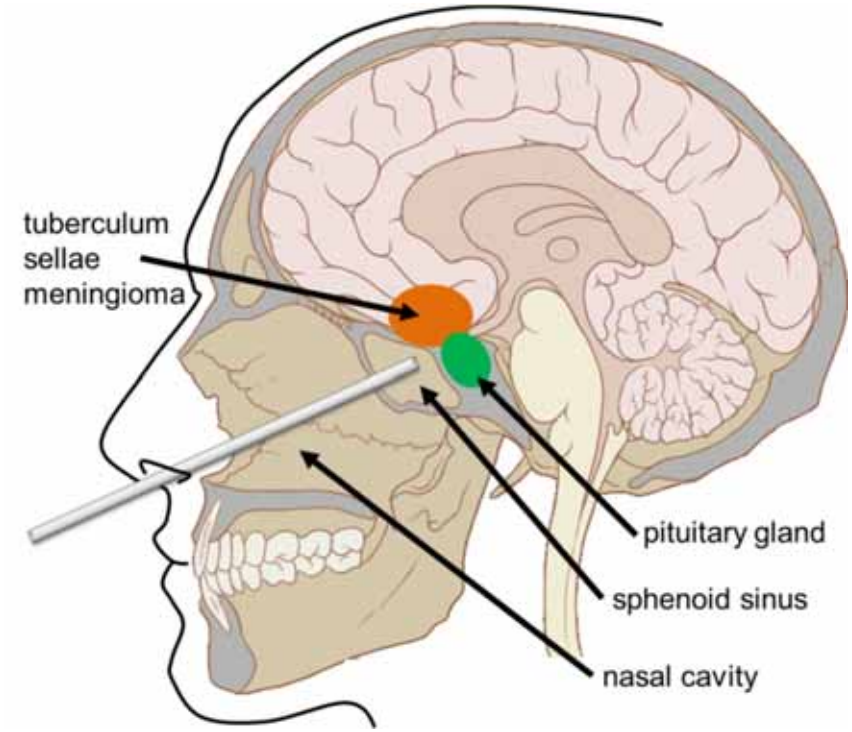

- Robotic design
- Ergonomics
- New camera views
- Improved image-guidance, virtual fixtures

Safe Robot – New Procedures

- „Turn corners“
- Dexterity in cranial area

- Potential applications
  - Fetal surgery
  - Lung surgery
  - Middle ear
  - Cardiac surgery

Conclusion

- Approach safety from the robot design perspective
- Consider safety in every development step

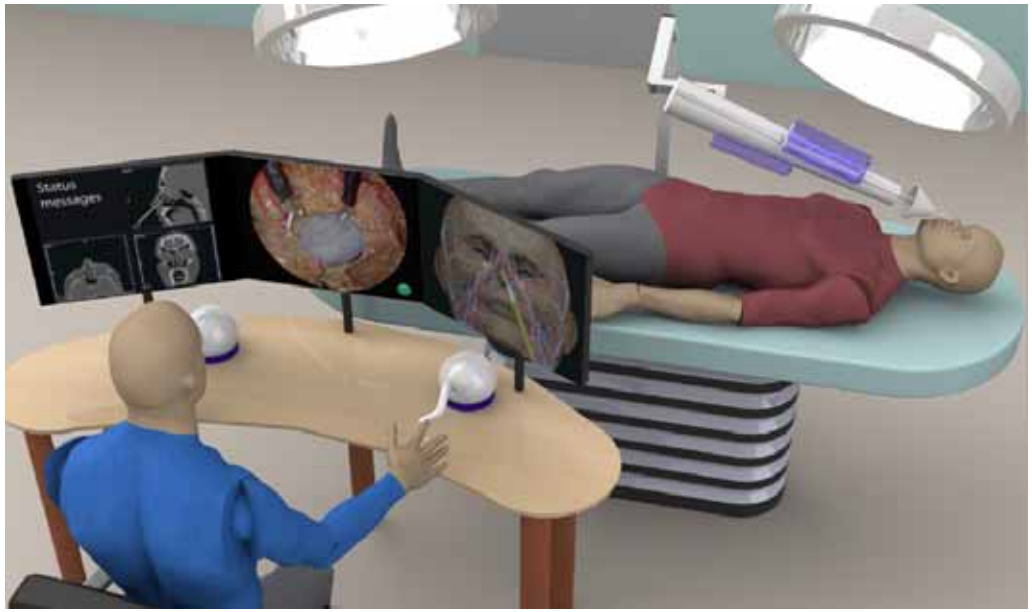

Intuitive Surgical Research Grant
NIH Grant # R21 EB011628
NIH Grant # R44 CA134169
NSF CAREER Award # IIS-1054331

http://research.vuse.vanderbilt.edu/MEDLab/